SAE INTERNATIONAL®

SAE MOBILUS®

Knowledge That Moves at the Speed of Flight

SAE EDGE™ Research Reports
Standards
Technical Papers
Journals
eBooks
eMagazines

Innovation in aerospace engineering starts with access to trusted, relevant knowledge. The SAE MOBILUS® technical resource platform delivers dynamically-revised standards, the latest research from industry thought leaders, and resources on emerging technologies such as additive manufacturing, electric flight, and new research in maintenance, repair & overhaul. The platform is continually updated with new content and enhanced with features requested by engineers, helping your team save time, boost productivity, and stay competitive.

Innovation starts with SAE MOBILUS.

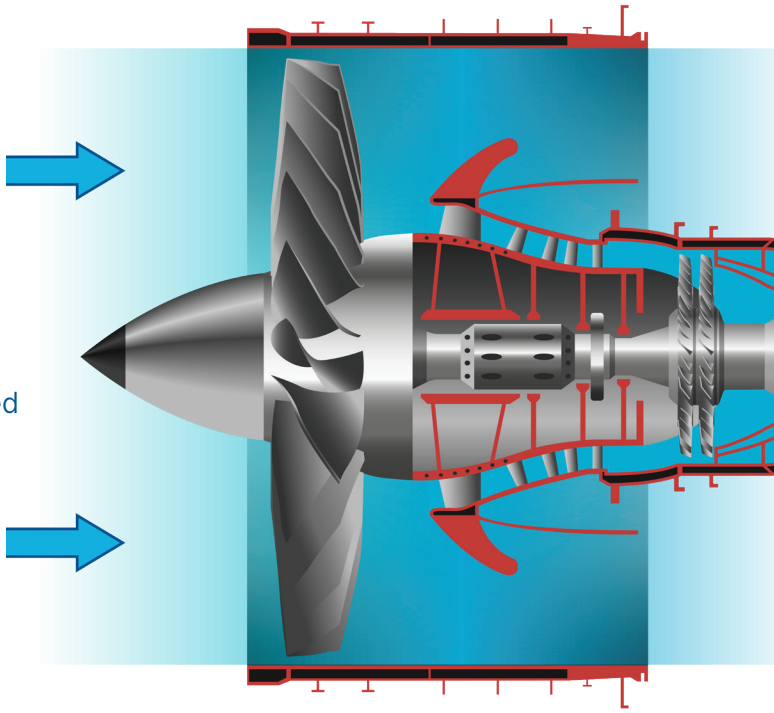

POWERFUL FEATURES FOR PRODUCTIVITY

SEARCH AND FILTERS

Find solutions to complex problems faster: a simple keyword search with 17 parameters, combined with facets and filters allow for easy navigation through thousands of resources.

DYNAMIC STANDARDS REDLINING

Ensure that your designs match the most current version. You'll avoid errors and save time comparing versions.

CUSTOMIZABLE DASHBOARD

Keep your most important content organized and within easy reach.

- Save recent searches
- Organize annotations
- Set custom notifications to learn about updated content
- View recent activity
- Create project folders

AEROSPACE STANDARDS

Aerospace Standards Subscription
Get instant access to 5,800+ active standards, continually updated to the most current versions. These critical documents are used for the design and production of thousands of parts, components, systems, and equipment for airframe, missile, ground support, propulsion and accessories. SAE Aerospace Standards include Aerospace Recommended Practices (ARP), Aerospace Information Report (AIR), Quality Standards, and Aerospace Resource Documents (ARD), including converted Military Specifications. A full archive of 8,750+ historical standards is also available.

Aerospace Materials Specifications (AMS)
These procurement standards are recognized throughout the aerospace community and other industries - including the U.S. Department of Defense who has adopted over 900 of the 3,300+ in total. Only characteristics and limits are included; compliance will ensure procurement of a specific form and condition, or a specific material or process.

SAE ITC Engine and Airframe Standards
The Aerospace Standards Part Qualification Program™ (ASPQP) currently administers more than 3,400 engine and airframe standards, about 10% of which are currently considered active and regularly maintained. More than 900 parts families are approved with certificates of qualification for a number of global suppliers.

2D/3D Standards Parts Configurator
Configure aerospace part parameters within the SAE MOBILUS® technical resource platform, downloadable in 150+ CAD and graphical file formats. Available for 500+ aerospace standards.

AEROSPACE TECHNICAL PAPERS

Get access to the latest industry knowledge with more than 21,000+ resources, written and peer-reviewed by subject-matter experts. These resources offer competitive insights, innovative solutions to nagging technical problems, exposure to new concepts and methods, and inspiration from peers.

SAE INTERNATIONAL SCHOLARLY JOURNALS

Access original, in-depth research written by industry thought leaders and vetted by a rigorous peer-review process. Subscribers gain state-of-the art knowledge, published across 12 journals, with articles covering key topics, including propulsion, safety and reliability, software, maintenance, and more.

SAE EDGE™ RESEARCH REPORTS

Inform strategy and explore critical advancements with SAE EDGE Research Reports. Each report is designed to identify critical issues in need of resolution and stimulate further discussion around needed frameworks, practices, and protocols to help the mobility industry move forward.

eBOOKS

Written by aerospace industry experts, SAE eBooks provide a critical, in-depth knowledge base for your organization. Subscribe today to access the collection of eBooks that best suits your needs.

AEROSPACE & DEFENSE TECHNOLOGY eMAGAZINE

Aerospace & Defense Technology brings together the latest advances from the U.S. Department of Defense, NASA, and other major industry leaders.

FLEXIBLE SUBSCRIPTION OPTIONS

COMPREHENSIVE COLLECTIONS

Unlimited access to the complete collection of standards, technical papers, eBooks, EDGE research reports, journals, or magazines. Subscribe today and discover how our flexible options and robust access controls provide knowledge solutions for users at any scale, from individuals to global OEMs to universities.

AEROSPACE COLLECTIONS

Innovation starts with the latest standards and industry knowledge. Each SAE Aerospace collection subscription provides access to technology-specific standards, technical papers, eBooks, and journal articles, helping you maintain a competitive edge. Collections include:

- **Maintenance, Repair & Overhaul Information Products**
- **Connected Aircraft Collection**
- **Advanced Manufacturing Knowledge Hub**
- **Power and Propulsion Information Products**

AEROPAKS SUBSCRIPTION

Download the SAE aerospace standards, Aerospace Materials Specifications, or SAE ITC Engine and Airframe standards your team needs most. Annual subscription "packs" range from 10–50 documents.

TECHSELECT

This cost-effective subscription option gives your team access to search and download from current and historical technical papers. Choose from 12–100 downloads per year.

WHAT SUBSCRIPTION IS RIGHT FOR YOU?

Use our Solution Finder, or contact SAE Customer Sales
discover.saemobilus.org/subscription-finder
CustomerSales@sae.org

1.888.875.3976 (U.S. and Canada only)
1.724.772.4086 (Outside U.S. and Canada)

Receive valuable SAE email communications in just 3 steps:

1. Log in to **my.sae.org**
2. Edit communication preferences
3. Select "Agree" to e-mail communications

P19389796